WHEEL 200Z0Z0D0N

Product SKU	200Z0Z0D0N
Standard Compliance	DIN EN 12533
Series	Z0Z0
Material of the Wheel	polyamide (PA) wheel center
Tread	polyamide (PA) tread
Temperature range	-40°C to +80°C
Wheel Diameter	200mm
Load Capacity	1000kg
Width of Tread	50mm
wheel hub Width	60mm
Wheel Bolt Size	M12
Bushing Diameter	20mm
Weight	1.36kg
Wheel Bearing	double ball bearing
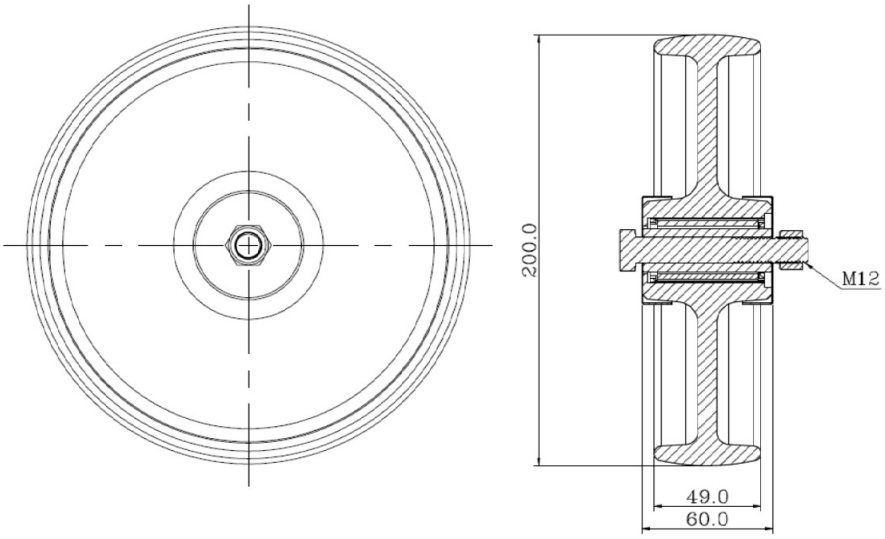
WHEEL 200Z0Z0D0N