WHEEL 075P2T2P0N

Product SKU	075P2T2P0N
Standard Compliance	DIN EN 12530
Series	P2T2
Material of the Wheel	polypropylene (PP) wheel center
Tread	thermoplastic rubber tread
Temperature range	-20°C to +60°C
Wheel Diameter	75mm
Load Capacity	75kg
Width of Tread	25mm
wheel hub Width	28mm
Wheel Bolt Size	M6
Bushing Diameter	8mm
Weight	0.07kg
Wheel Bearing	plain bearing
Rubber Shore	95° Shore A
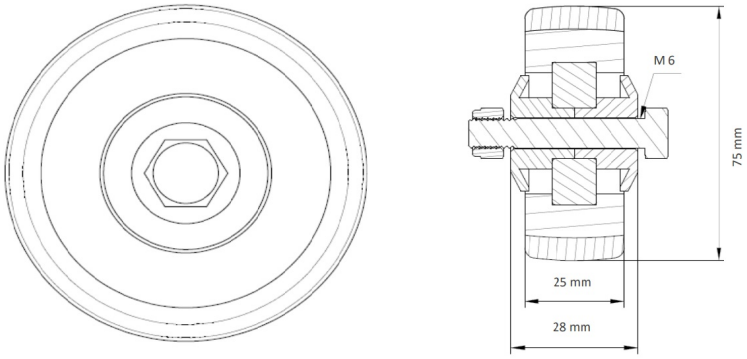
WHEEL 075P2T2P0N