CASTOR TPP37WC100AAX7D0N

Product SKU	TPP37WC100AAX7D0N
Standard Compliance	DIN EN 12532
Series	AAX7
Fastening	Plate fastening
Brake and Direction	back brake
Material of the Wheel	aluminum wheel center
Tread	PU-lastic tread
Temperature range	-20°C to +60°C
Wheel Diameter	100mm
Load Capacity	250kg
Total Hight	128mm
Width of Tread	40mm
wheel hub Width	40mm
Offset	40mm
Dimension of Plate	105x80mm
Hole Spacing of the Plate	80/77x60mm
Swivel Radius	127mm
Wheel Bolt Size	M8
Bushing Diameter	12mm
Weight	1.25kg
Wheel Bearing	double ball bearing
Rubber Shore	75° Shore A
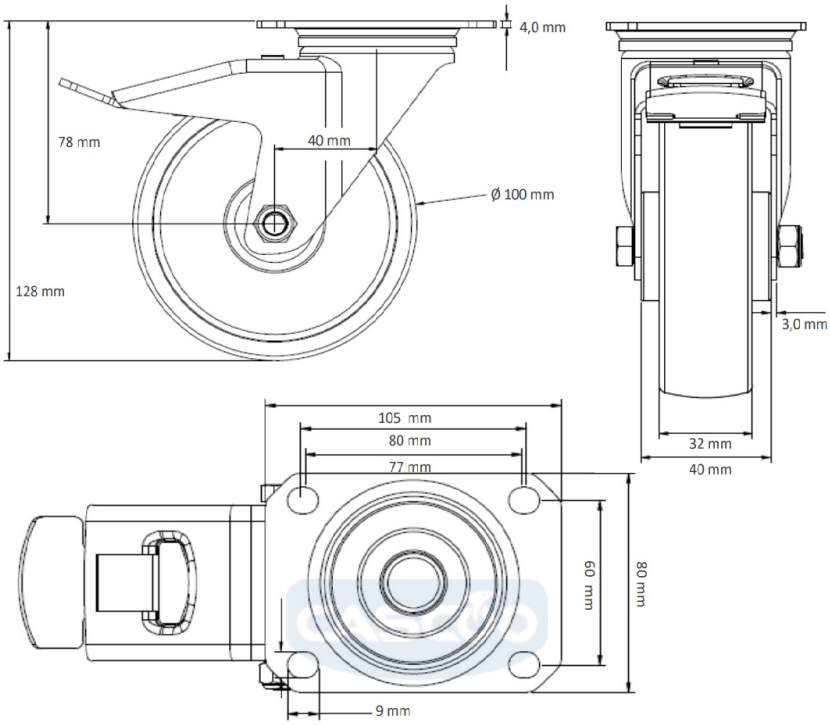
CASTOR TPP37WC100AAX7D0N