CASTOR TPP37WC100AAU5D0N

Product SKU	TPP37WC100AAU5D0N
Standard Compliance	DIN EN 12532
Series	AAU5
Fastening	Plate fastening
Brake and Direction	back brake
Material of the Wheel	aluminum wheel center
Tread	polyurethane (PU) tread
Temperature range	-20°C to +60°C
Wheel Diameter	100mm
Load Capacity	250kg
Total Hight	128mm
Width of Tread	40mm
wheel hub Width	40mm
Offset	40mm
Dimension of Plate	105x80mm
Hole Spacing of the Plate	80/77x60mm
Swivel Radius	127mm
Wheel Bolt Size	M8
Bushing Diameter	12mm
Weight	1.24kg
Wheel Bearing	double ball bearing
Rubber Shore	92° Shore A
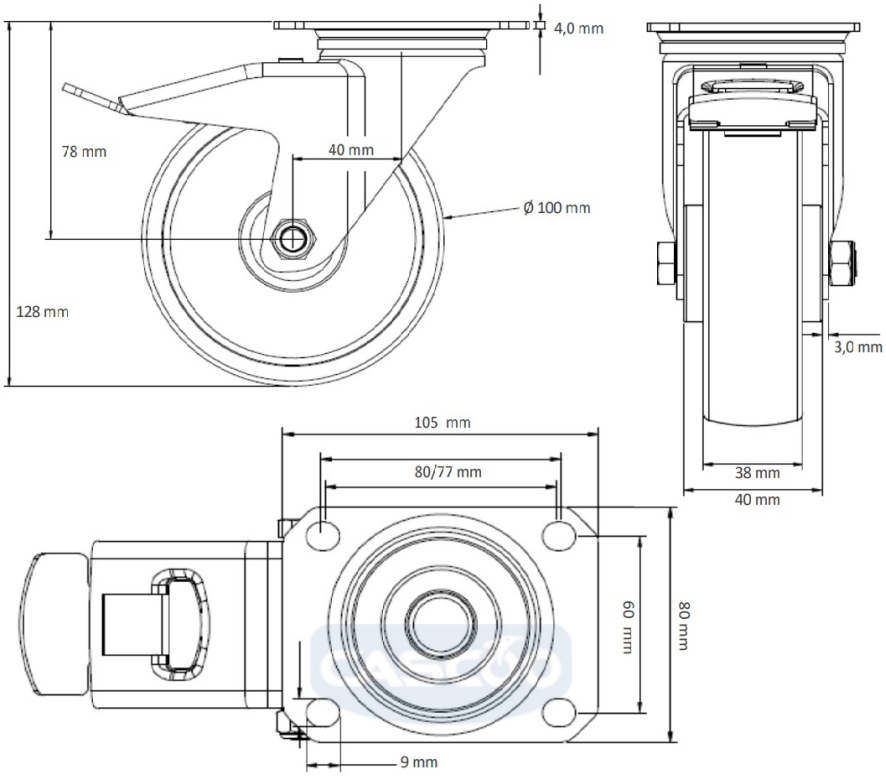
CASTOR TPP37WC100AAU5D0N