CASTOR SWP58WC200P4S4P0N

Product SKU	SWP58WC200P4S4P0N
Standard Compliance	DIN EN 12532
Series	P4S4
Fastening	Plate fastening
Brake and Direction	swivel without brake
Material of the Wheel	polypropylene (PP) wheel center
Tread	solid rubber tread
Temperature range	-20°C to +60°C
Wheel Diameter	200mm
Load Capacity	205kg
Total Hight	238mm
Width of Tread	50mm
wheel hub Width	60mm
Offset	55mm
Dimension of Plate	135x110mm
Hole Spacing of the Plate	105×84/76mm
Wheel Bolt Size	M12
Bushing Diameter	20mm
Wheel Bearing	plain bearing
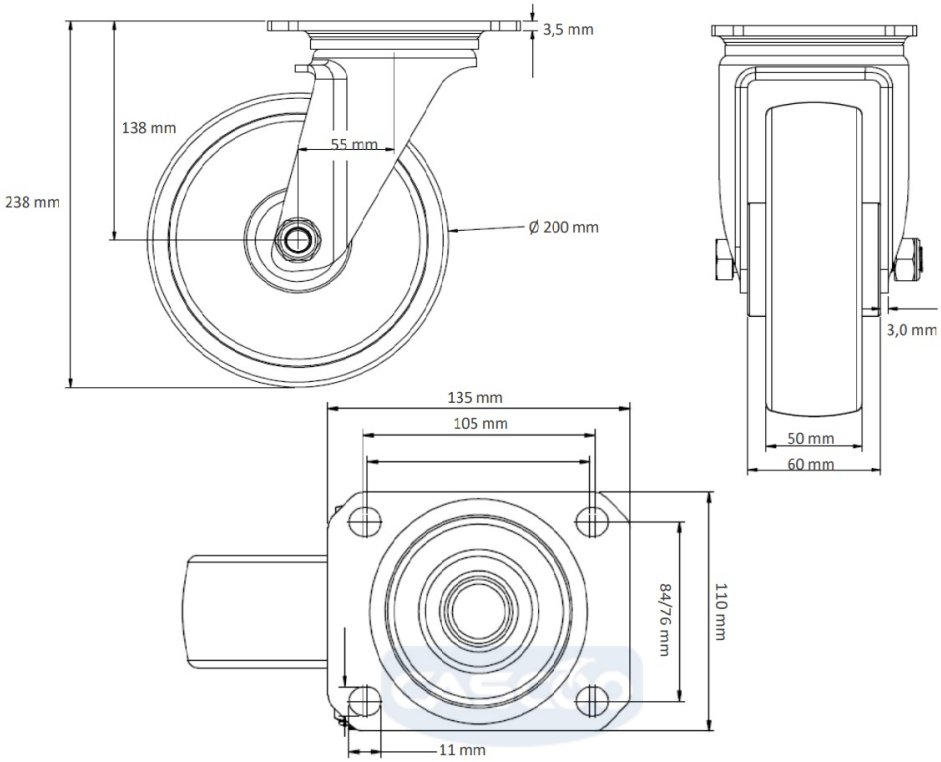
CASTOR SWP58WC200P4S4P0N