CASTOR SPP57WC160N2U6B32

Product SKU	SPP57WC160N2U6B32
Standard Compliance	DIN EN 12532
Series	N2U6
Fastening	Plate fastening
Brake and Direction	swivel without brake
Material of the Wheel	polyamide (PA) wheel center
Tread	polyurethane (PU) tread
Temperature range	-40°C to +80°C
Wheel Diameter	160mm
Load Capacity	350kg
Total Hight	195mm
Width of Tread	40mm
wheel hub Width	59mm
Offset	55mm
Dimension of Plate	135x110mm
Hole Spacing of the Plate	105×84/76mm
Wheel Bolt Size	M12
Bushing Diameter	12mm
Weight	1.83kg
Wheel Bearing	ball bearing
Rubber Shore	95° Shore A
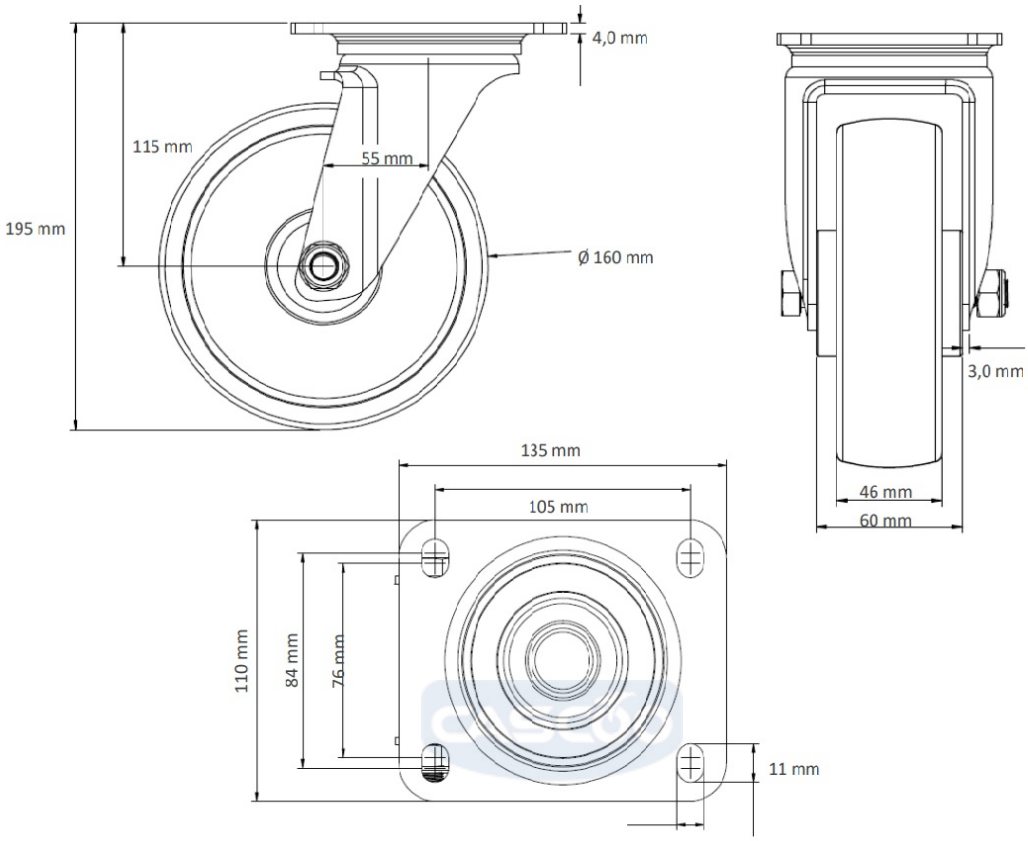
CASTOR SPP57WC160N2U6B32