CASTOR SIP5OSC200N2U6L0N

Product SKU	SIP5OSC200N2U6L0N
Standard Compliance	DIN EN 12532
Series	N2U6
Fastening	Plate fastening
Brake and Direction	swivel without brake
Material of the Wheel	polyamide (PA) wheel center
Tread	polyurethane (PU) tread
Temperature range	-40°C to +80°C
Wheel Diameter	200mm
Load Capacity	300kg
Total Hight	235mm
Width of Tread	48mm
wheel hub Width	59mm
Offset	55mm
Dimension of Plate	135x110mm
Hole Spacing of the Plate	105×76/84mm
Wheel Bolt Size	M12
Bushing Diameter	20mm
Wheel Bearing	plain bearing
Special Features	stainless steel
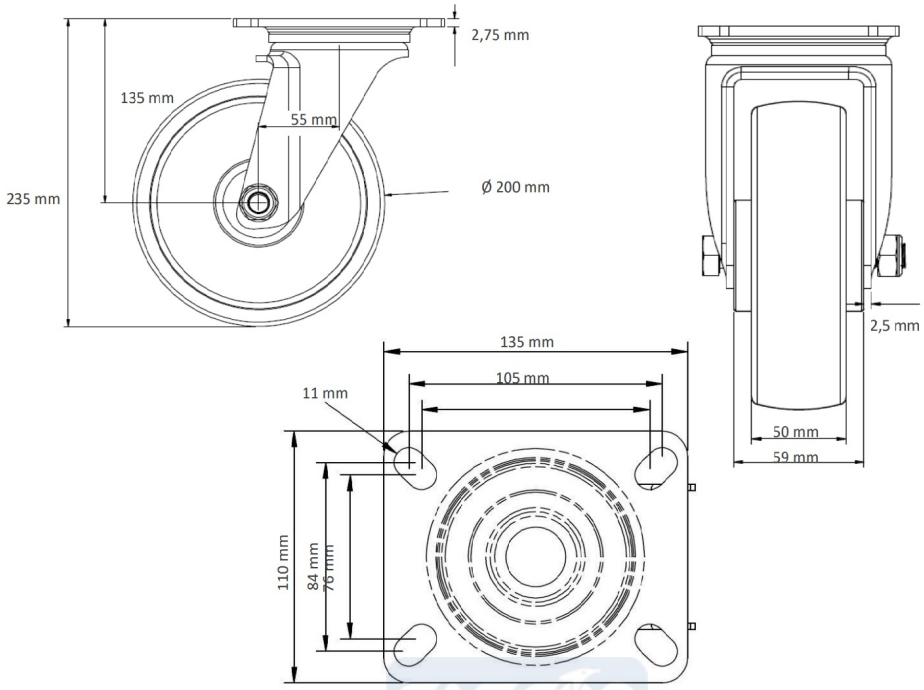
CASTOR SIP5OSC200N2U6L0N