CASTOR SBP26WC100P2G2B32E

Product SKU	SBP26WC100P2G2B32E
Standard Compliance	DIN EN 12532
Series	P2G2 (ESD)
Fastening	Plate fastening
Brake and Direction	swivel without brake
Material of the Wheel	polypropylene (PP) wheel center
Tread	thermoplastic rubber tread
Temperature range	-20°C to +60°C
Wheel Diameter	100mm
Load Capacity	90kg
Total Hight	125mm
Width of Tread	32mm
wheel hub Width	40mm
Offset	40mm
Dimension of Plate	105x80mm
Hole Spacing of the Plate	80/77x60mm
Wheel Bolt Size	M8
Bushing Diameter	8mm
Weight	0.59kg
Wheel Bearing	ball bearing
Special Features	electrostatic (ESD)
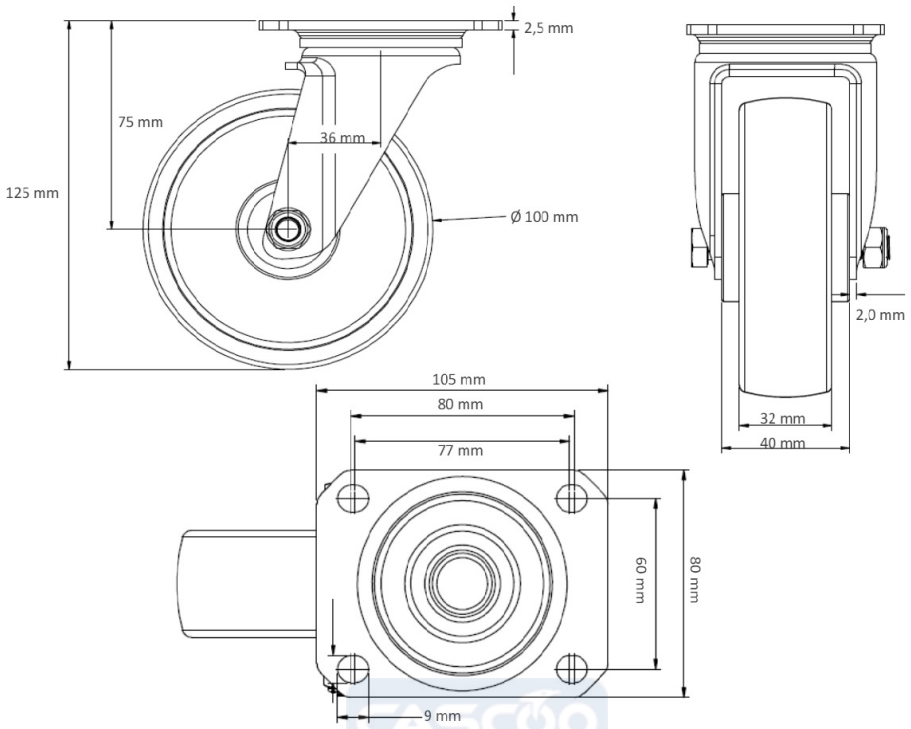
CASTOR SBP26WC100P2G2B32E