CASTOR HIH36SC080N2U6Q0N

Product SKU	HIH36SC080N2U6Q0N
Standard Compliance	DIN EN 12532
Series	N2U6
Fastening	Bolt fastening
Material of the Wheel	polyamide (PA) wheel center
Tread	polyurethane (PU) tread
Temperature range	-40°C to +80°C
Wheel Diameter	80mm
Load Capacity	130kg
Total Hight	106mm
Width of Tread	32mm
wheel hub Width	40mm
Offset	36mm
Fastening Bolt Hole Diameter	13mm
Wheel Bolt Size	M8
Bushing Diameter	12mm
Weight	0.36kg
Wheel Bearing	roller bearing
Special Features	stainless steel
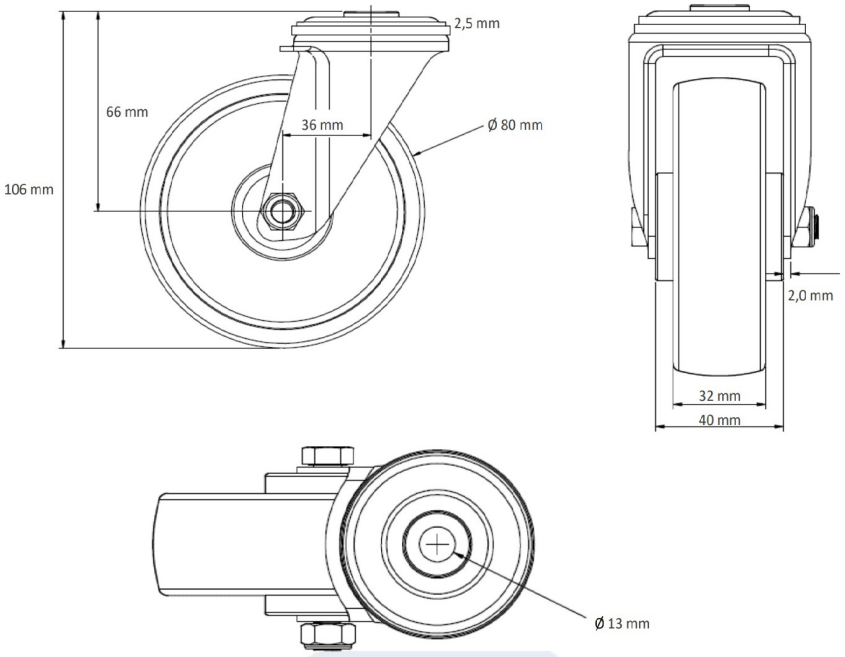
CASTOR HIH36SC080N2U6Q0N