CASTOR FIP32SC125R4E2Q0N

Product SKU	FIP32SC125R4E2Q0N
Standard Compliance	DIN EN 12532
Series	R4E2
Fastening	Plate fastening
Brake and Direction	fixed direction
Material of the Wheel	polyamide (PA) wheel center
Tread	elastic tread
Temperature range	-20°C to +80°C
Wheel Diameter	125mm
Load Capacity	200kg
Total Hight	155mm
Width of Tread	38mm
wheel hub Width	50mm
Dimension of Plate	96x80mm
Hole Spacing of the Plate	80/77x60mm
Wheel Bolt Size	M8
Bushing Diameter	12mm
Wheel Bearing	roller bearing
Special Features	stainless steel
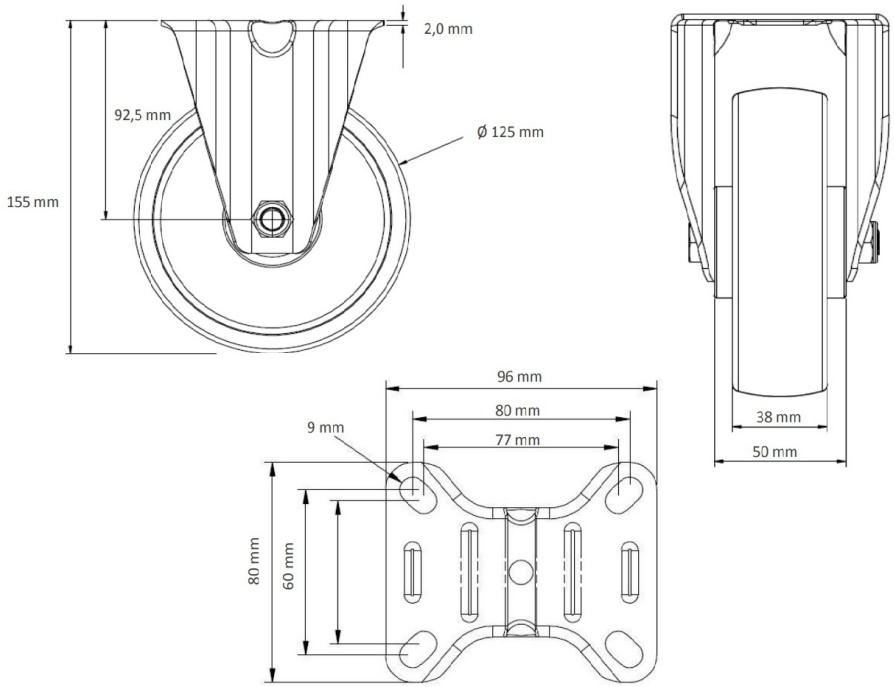
CASTOR FIP32SC125R4E2Q0N