CASTOR FHPK4WC080DAU5D0N

Product SKU	FHPK4WC080DAU5D0N
Standard Compliance	DIN EN 12533
Series	DAU5
Fastening	Plate fastening
Brake and Direction	fixed direction
Material of the Wheel	aluminum wheel center
Tread	polyurethane (PU) tread
Temperature range	-20°C to +60°C
Wheel Diameter	80mm
Load Capacity	180kg
Total Hight	120mm
Width of Tread	30mm
wheel hub Width	47mm
Dimension of Plate	100x88mm
Hole Spacing of the Plate	80/75×60/55/48mm
Wheel Bolt Size	M10
Bushing Diameter	15mm
Wheel Bearing	double ball bearing
Rubber Shore	95° Shore A
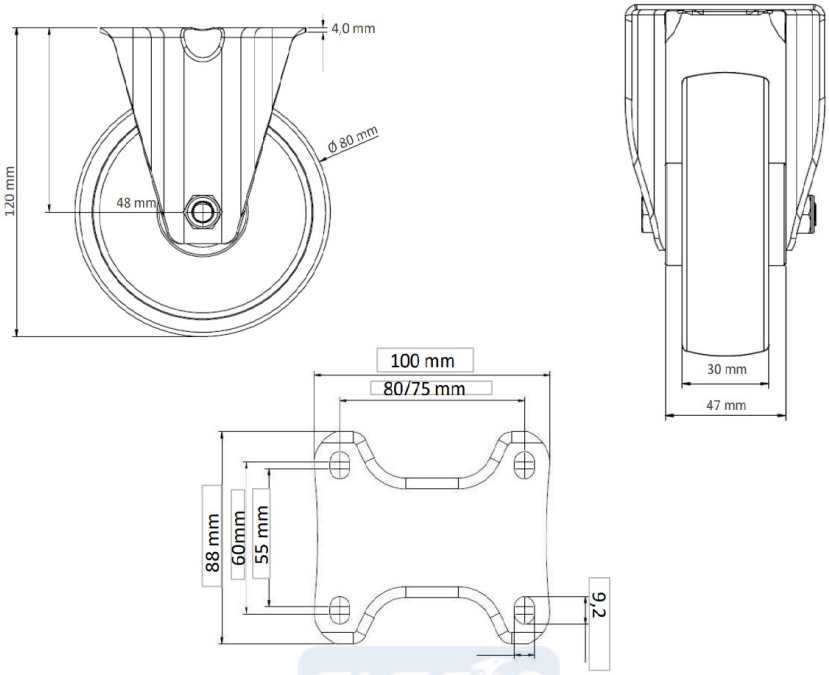
CASTOR FHPK4WC080DAU5D0N