CASTOR BCH0SPC100P2A2B42

Product SKU	BCH0SPC100P2A2B42
Standard Compliance	DIN EN 12527
Series	CARA
Fastening	Bolt fastening
Brake and Direction	back brake
Material of the Wheel	polypropylene (PP) wheel center
Tread	thermoplastic rubber tread
Temperature range	-20°C to +60°C
Wheel Diameter	100mm
Load Capacity	100kg
Total Hight	137mm
Width of Tread	32mm
wheel hub Width	32mm
Offset	38mm
Fastening Bolt Hole Diameter	11mm
Swivel Radius	97mm
Wheel Bolt Size	M8
Bushing Diameter	8mm
Wheel Bearing	ball bearing
Rubber Shore	85° Shore A
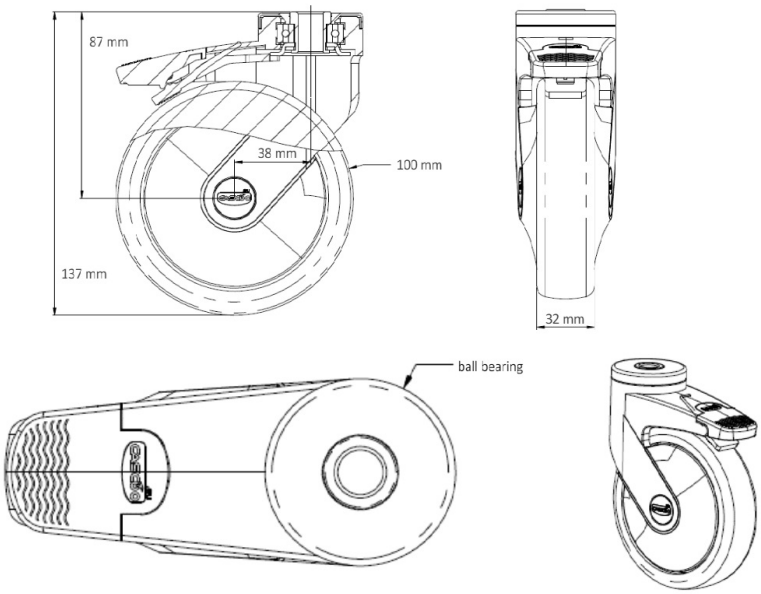
CASTOR BCH0SPC100P2A2B42