CASTOR BBH35WC100R4F1R0N

Product SKU	BBH35WC100R4F1R0N
Standard Compliance	DIN EN 12532
Series	R4F1
Fastening	Bolt fastening
Brake and Direction	back brake
Material of the Wheel	polyamide (PA) wheel center
Tread	elastic tread
Temperature range	-20°C to +80°C
Wheel Diameter	100mm
Load Capacity	150kg
Total Hight	124mm
Width of Tread	35mm
wheel hub Width	40mm
Offset	40mm
Fastening Bolt Hole Diameter	13mm
Swivel Radius	127mm
Wheel Bolt Size	M8
Bushing Diameter	12mm
Weight	0.78kg
Wheel Bearing	roller bearing
Rubber Shore	75° Shore A
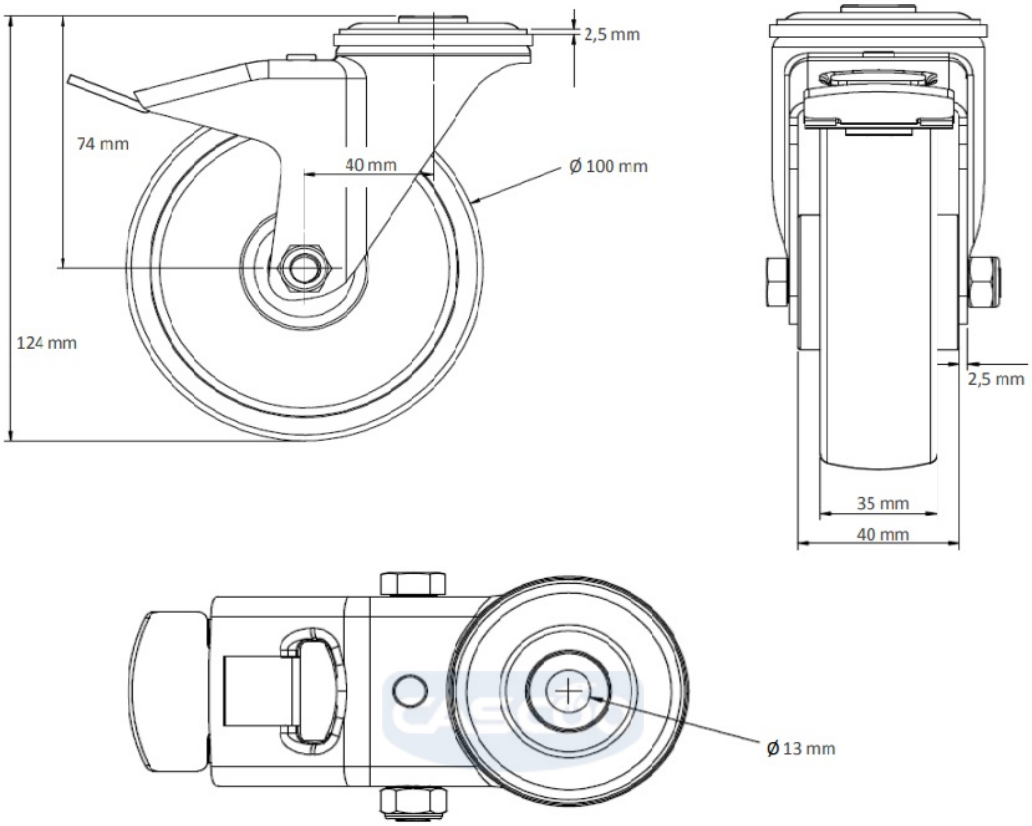
CASTOR BBH35WC100R4F1R0N